Degree of protection: IP65

Bulkhead mounted housings

Thread	Designation	Order No.
---	H24B-BK-1L/SC	111 024 321 1001
	with plastic cover	
---	H24B-BK-1L/SC-CV	111 024 361 1001
	with metal cover	
---	H24B-BK-1L/SC-MCV	111 024 361 1101

Please refer to page 15-02 for choosing proper model of lock.

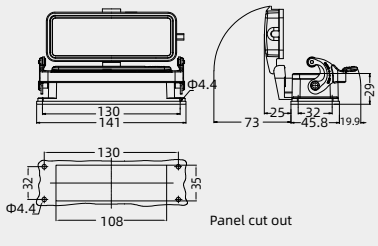

BK hole cover plate

Applications	Designation	Order No.
---	24B-BK/MCV	111 024 390 8001

The mounting holes of the mounting cabinet can be temporarily sealed. Applicable to the case that the mounting hole has been opened and the connector has not been installed.

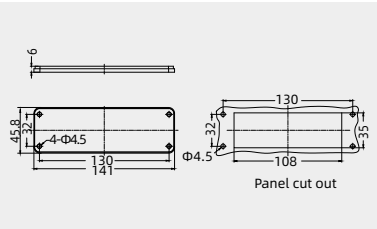

Surface mounted housings

Thread	Designation	Order No.
M25	H24B-SF-1L/SC-M25	111 024 221 1003
2M25	H24B-SF-1L/SC-2M25	111 024 221 1023
PG21	H24B-SF-1L/SC-PG21	111 024 221 1011
2PG21	H24B-SF-1L/SC-2PG21	111 024 221 1031
	with plastic cover	
M25	H24B-SF-1L/SC-CV-M25	111 024 261 1003
2M25	H24B-SF-1L/SC-CV-2M25	111 024 261 1023
PG21	H24B-SF-1L/SC-CV-PG21	111 024 261 1011
2PG21	H24B-SF-1L/SC-CV-2PG21	111 024 261 1031
	with metal cover	
M25	H24B-SF-1L/SC-MCV-M25	111 024 261 1103
2M25	H24B-SF-1L/SC-MCV-2M25	111 024 261 1123
PG21	H24B-SF-1L/SC-MCV-PG21	111 024 261 1111
2PG21	H24B-SF-1L/SC-MCV-2PG21	111 024 261 1131

Please refer to page 15-02 for choosing proper model of lock.

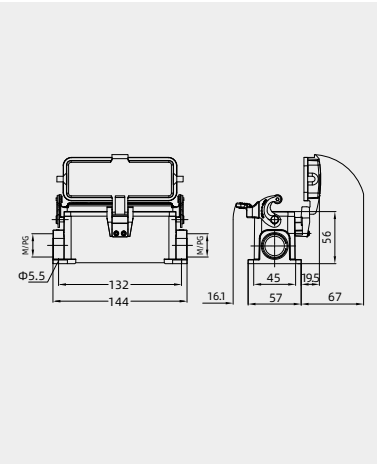

Surface mounted housings, high construction

Thread	Designation	Order No.
M32	H24B-SFH-1L/SC-M32	111 024 221 5004
2M32	H24B-SFH-1L/SC-2M32	111 024 221 5024
PG21	H24B-SFH-1L/SC-PG21	111 024 221 5011
2PG21	H24B-SFH-1L/SC-2PG21	111 024 221 5031
PG29	H24B-SFH-1L/SC-PG29	111 024 221 5012
2PG29	H24B-SFH-1L/SC-2PG29	111 024 221 5032
	with plastic cover	
M32	H24B-SFH-1L/SC-CV-M32	111 024 261 5004
2M32	H24B-SFH-1L/SC-CV-2M32	111 024 261 5024
PG21	H24B-SFH-1L/SC-CV-PG21	111 024 261 5011
2PG21	H24B-SFH-1L/SC-CV-2PG21	111 024 261 5031
PG29	H24B-SFH-1L/SC-CV-PG29	111 024 261 5012
2PG29	H24B-SFH-1L/SC-CV-2PG29	111 024 261 5032
	with metal cover	
M32	H24B-SFH-1L/SC-MCV-M32	111 024 261 5104
2M32	H24B-SFH-1L/SC-MCV-2M32	111 024 261 5124
PG21	H24B-SFH-1L/SC-MCV-PG21	111 024 261 5111
2PG21	H24B-SFH-1L/SC-MCV-2PG21	111 024 261 5131
PG29	H24B-SFH-1L/SC-MCV-PG29	111 024 261 5112
2PG29	H24B-SFH-1L/SC-MCV-2PG29	111 024 261 5132
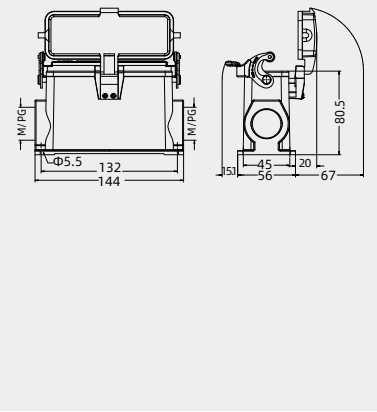
Please refer to page 15-02 for choosing proper model of lock.